PS470/Paper Bank Type 7100 (G569)

PS470/Paper Bank Type 7100 (G569)

PARTS CATALOG

This catalog gives the numbers and names of parts on this machine.

1.Exterior (G569) 2
2.Paper Tray 1 (G569) 4
3.Paper Tray 2 (G569) 6
4.Paper Tray 3 (G569) 8
5.Paper Feed Section 1 (G569) 10
6.Paper Feed Section 2 (G569) 12
7.Drive And Electrical (G569) 14
8.Interface Board (G569-17/26/27) 16
9.Interface Board (G569-57/66/67) 18
10.Decals And Documents (G569) 20
Parts Index..... 23

Februaly ,20 ' 2004

1.Exterior (G569)

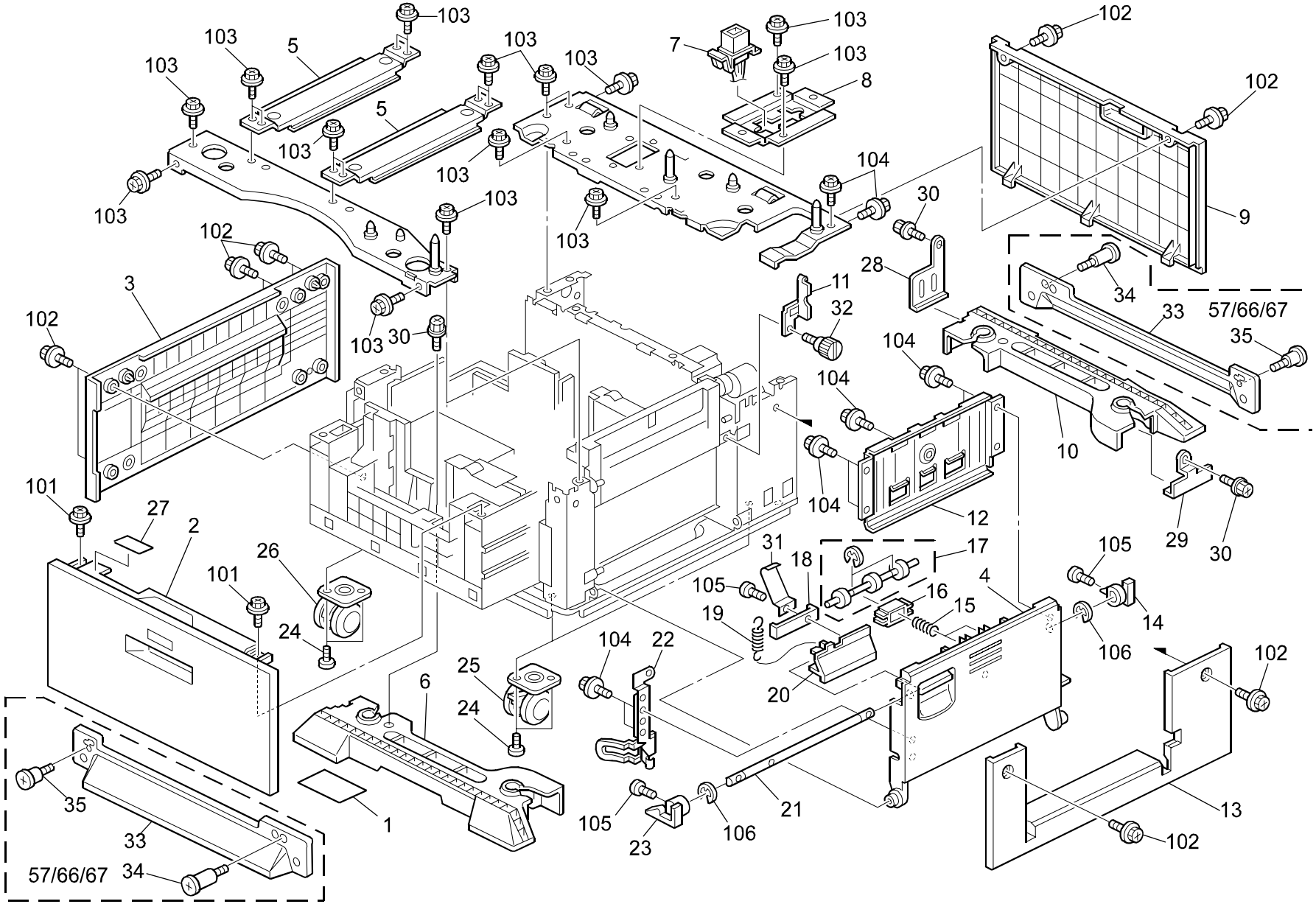

1.Exterior (G569)

Index No.	Part No.	Description	Q'ty Per Assembly
1	G569 2695	Decal - Paper Set Direction	1
2	G569 2690	Front Cover	1
3	G569 1251	Left Cover - Large Capacity Tray	1
4	G569 2515	Guide Plate - Vertical Transport	1
5	A682 1067	Upper Middle Stay	2
6	G569 6160	Front Stand (17/26/27)	1
7	G568 5320	Harness - Interface	1
8	G569 1078	Drawer Bracket	1
9	G568 1251	Rear Cover	1
10	G569 6161	Rear Stand (17/26/27)	1
11	G567 6310	Bracket:Coupling:Paper Bank	1
12	G569 2565	Guide Plate - Vertical Transport	1
13	G568 1250	Right Cover	1
14	A682 2553	Rear Hook - Vertical Transport Cover	1
15	AA06 3573	Compression Spring	2
16	AA08 0254	Bushing - M4	2
17	A232 2862	Driven Roller	1
18	A682 2559	Lever Stopper	1
19	AA06 0715	Pressure Spring	1
20	G568 2551	Lever - Vertical Transport	1
21	AA14 0670	Un Lock Shaft	1
22	A682 2565	Stopper - Vertical Transport Cover	1
23	A682 2552	Front Hook - Vertical Transport	1
24	A507 1096	Philips Screw - M5x6	8
25	AH01 2013	Stopper Caster - 60kgf	2
26	AH01 2014	Caster - 60kgf	2
27	G569 2697	Decal - Paper Tray - Set	1
28	G569 6168	Rear Left Stand Bracket	1
29	G569 6169	Rear Right Stand Bracket	1
30	A548 6121	Screw - M4	2
31	G569 2570	Grounding Plate - Vertical Transport Shaft	1
32	G568 6220	Fixing Screw	1
33	G569 6200	Side Stand (57/66/67)	2
34	G569 6207	Screw - Stand Long	2
35	G569 6206	Screw - Stand Short	2

Index No.	Part No.	Description	Q'ty Per Assembly
101	0450 3008B	Tapping Screw - M3x8	
102	0451 3008H	Tapping Screw - M3x8	
103	0451 3006B	Tapping Screw - M3x6	
104	0450 4010B	Tapping Screw - 4x10	
105	0353 0060B	Philips Pan Head Screw - M3x6	
106	0805 0088	Retaining Ring - M6	

2.Paper Tray 1 (G569)

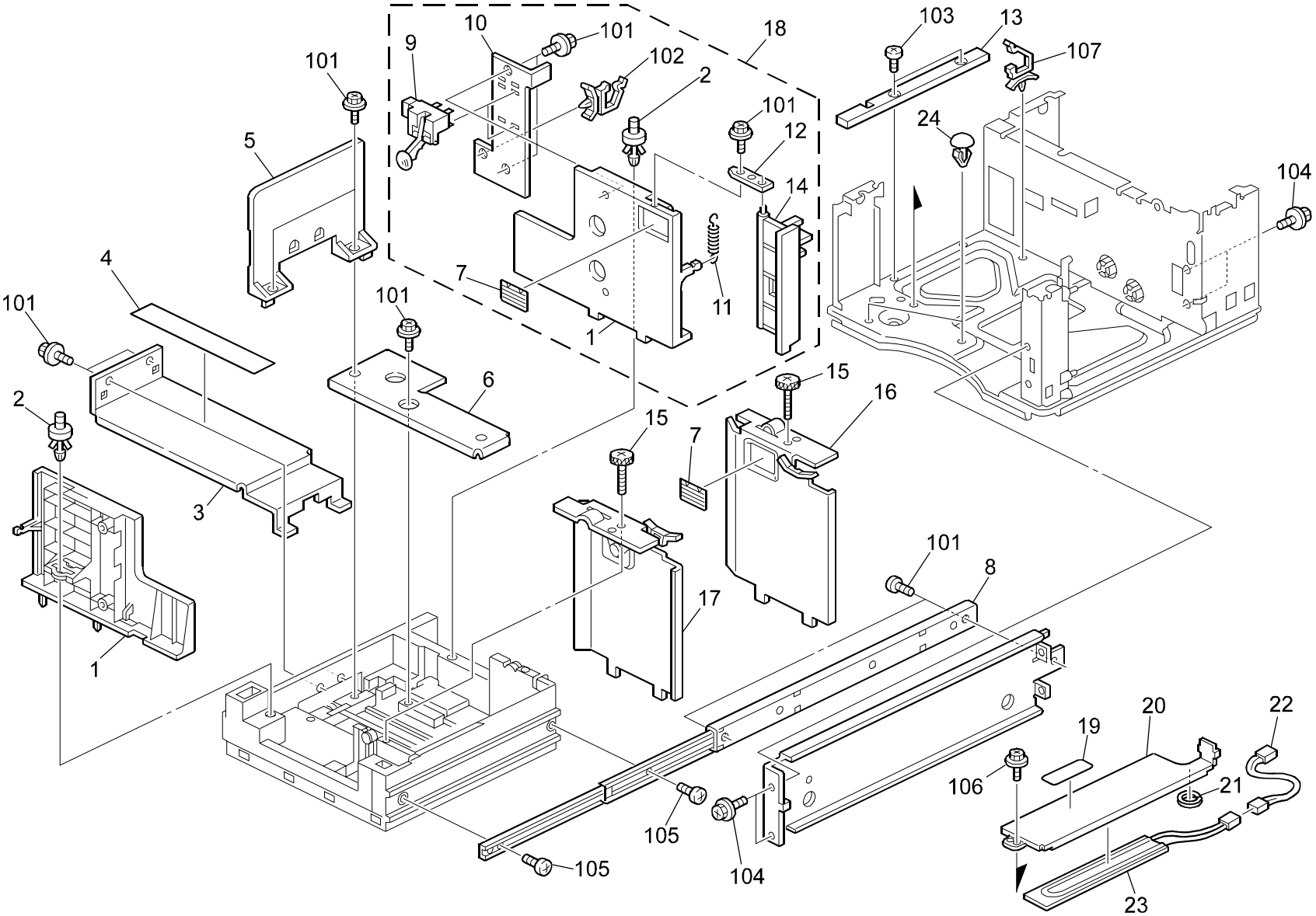

2.Paper Tray 1 (G569)

Index No.	Part No.	Description	Q'ty Per Assembly
*	G569 2601	Tandem LCT Ass'y	1
1	G569 2688	Front Side Fence - Tandem Tray	2
2	G569 2761	Rivet - 31j5	2
3	G569 2680	Cover - Timing Belt	1
4	A096 6678	Decal - Left Paper Set	1
5	G569 2686	End Fence - Tandem Tray	1
6	G569 2715	Cover - Positioning Sensor	1
7	AA00 2010	Decal - Paper Level	2
8	G569 1175	Right Slide Rail	1
9	G569 5510	Photointerruptor - Paper Volume	2
10	G569 2709	Bracket - Paper Height Sensor - Tandem LCT	1
11	G569 2712	Tension Spring	1
12	G569 2706	Shoe:Side Fence	1
13	G569 1080	Lower Guide Rail	1
14	G569 2707	End Fence - Tandem Tray	1
15	AA14 3508	Flat Knob Screw - M4x10	2
16	G569 2650	Rear Side Fence	1
17	G569 2640	Front Side Fence	1
18	G569 2705	Side Fence Ass'y - Tandem Tray	1
19	GA00 3056	Decal - Heater Warning	1
20	G568 6560	Heater Sink Plate	1
21	A230 2525	Stopper - Heater	1
22	G568 5340	Heater Harness	1
23	AX40 0109	Heater - 120V 9W	1
23	AX40 0110	Heater - 230V 9W	1

Index No.	Part No.	Description	Q'ty Per Assembly
101	0450 3008B	Tapping Screw - M3x8	
102	1105 0511	Harness Clamp - LWS-0306ZC	
103	0452 4008B	Binding Self Tapping Screw - M4x8	
104	0451 3006B	Tapping Screw - M3x6	
105	0354 0080B	Screw - M4X8	
106	0954 4008Z	Double Sens Screw - M4X8	
107	1105 0487	Harness Clamp	

3.Paper Tray 2 (G569)

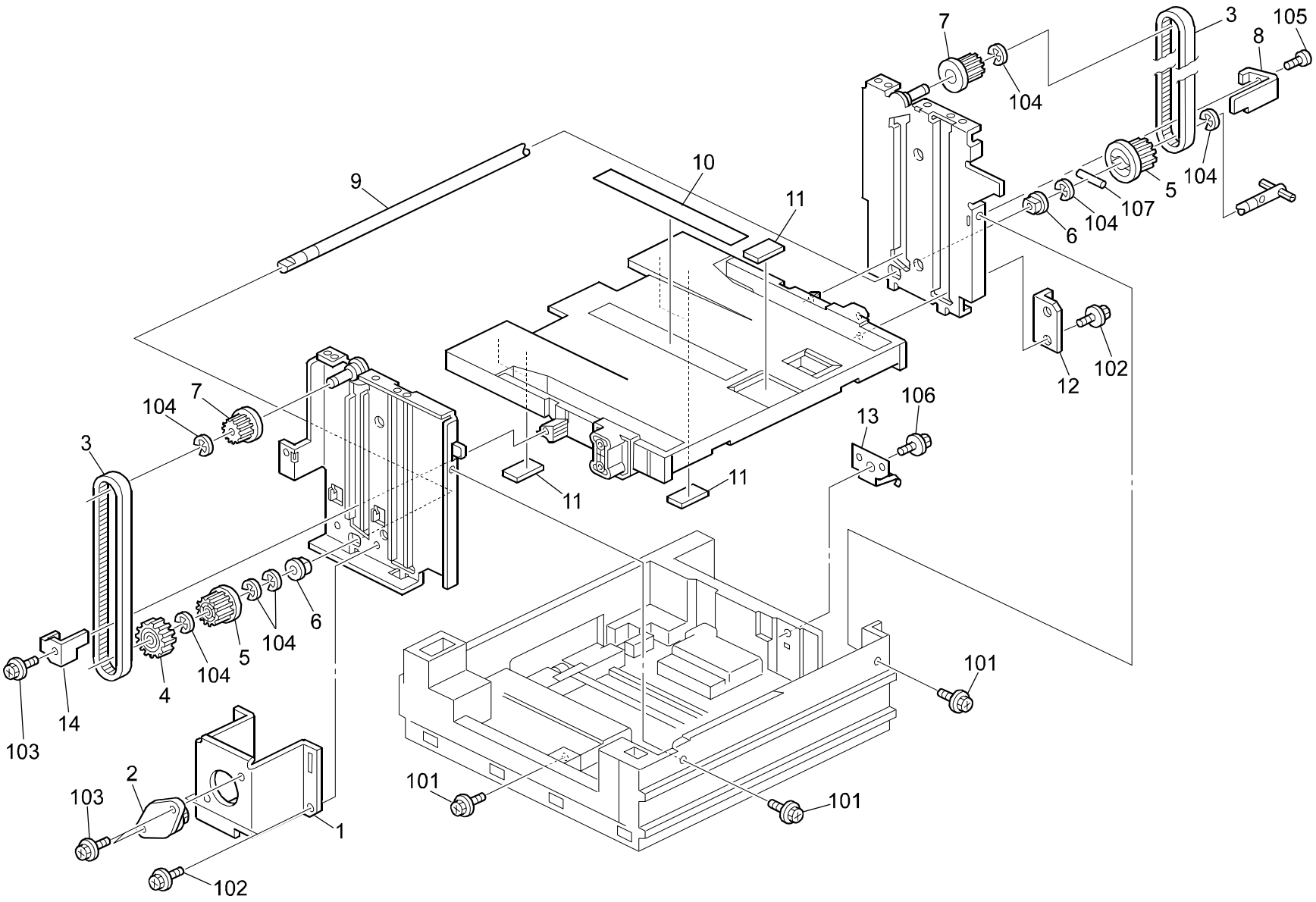

3.Paper Tray 2 (G569)

Index No.	Part No.	Description	Q'ty Per Assembly
*	G569 2602	Large Capacity Tray (17/26/27/66/67)	1
*	G569 2606	Large Capacity Tray:Arabia:Exp:Ass'y (57)	1
1	G569 2667	Bracket	1
2	A862 2692	Oil Damper	1
3	G569 2660	Timing Belt - S3M378	2
4	AB01 4135	Gear - 18Z	1
5	AB03 0633	Timing Pulley - Tray Bottom Plate	2
6	AA08 2070	Bushing - 8x16x7	2
7	G569 2710	Timing Pulley - Tray Bottom Plate	2
8	G569 2663	Rear Stay - Timing Belt	1
9	A862 2641	Shaft - Tray Bottom Plate Ass'y	1
10	A096 6677	Decal - Right Paper Set	1
11	A421 2543	Friction Pad	5
12	G569 2669	Bracket - Roller	1
13	G569 2684	Spring Plate - Tandem LCT	1
14	G569 2662	Front Stay - Timing Belt	1

Index No.	Part No.	Description	Q'ty Per Assembly
101	0451 3008B	Tapping Screw - M3x8	
102	0450 3008B	Tapping Screw - M3x8	
103	0451 4006B	Tapping Screw - 4x6	
104	0720 0060E	Retaining Ring - M6	
105	0452 3008B	Tapping Screw - M3x8	
106	0451 3006B	Tapping Screw - M3x6	
107	0623 0140E	Spring Pin - 3x14mm	

4.Paper Tray 3 (G569)

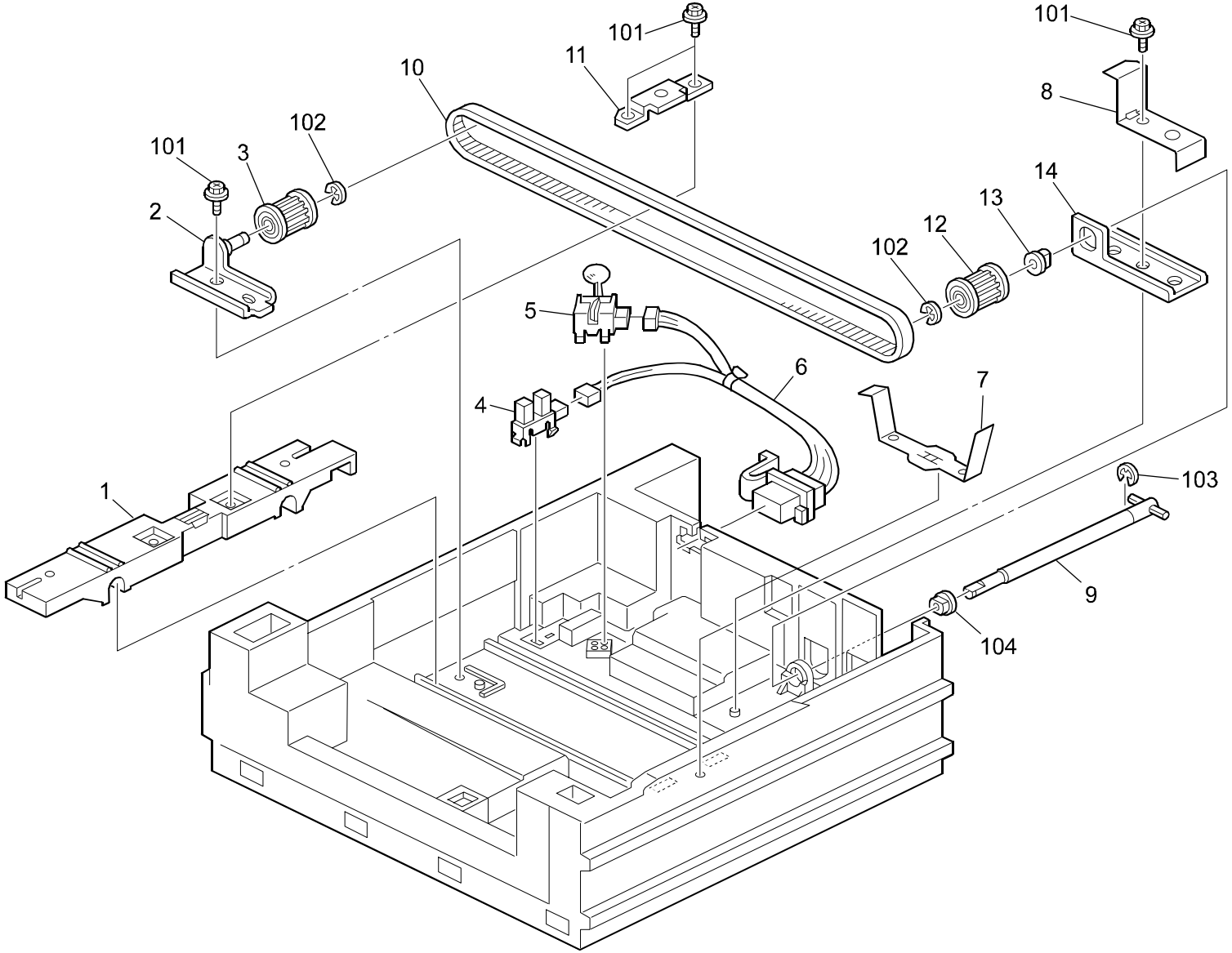

4.Paper Tray 3 (G569)

Index No.	Part No.	Description	Q'ty Per Assembly
1	G569 2670	Slider - End Fence	1
2	A862 2745	Timing Belt Bracket	1
3	AB03 3085	Timing Pulley - 15T Driven	1
4	AW02 0056	Photointerruptor - EE-SX4235A-P1	1
5	G569 5510	Photointerruptor - Paper Volume	1
6	G569 5350	Harness - Tandem Tray	1
7	G569 2682	Grounding Plate - Sensor	1
8	G569 2683	Grounding Plate - Timing Belt Cover	1
9	G569 2883	Shaft - Slider	1
10	G569 2674	Timing Belt - S3M588	1
11	G569 2672	Stopper - Timing Belt	1
12	AB03 3084	Timing Pulley - 15t - Drive	1
13	AA08 2070	Bushing - 8x16x7	1
14	A862 2728	Timing Pulley Bracket	1

Index No.	Part No.	Description	Q'ty Per Assembly
101	0450 3008B	Tapping Screw - M3x8	
102	0720 0040E	Retaining Ring - M4	
103	0720 0060E	Retaining Ring - M6	
104	0805 3480	Bushing - 6mm	

5.Paper Feed Section 1 (G569)

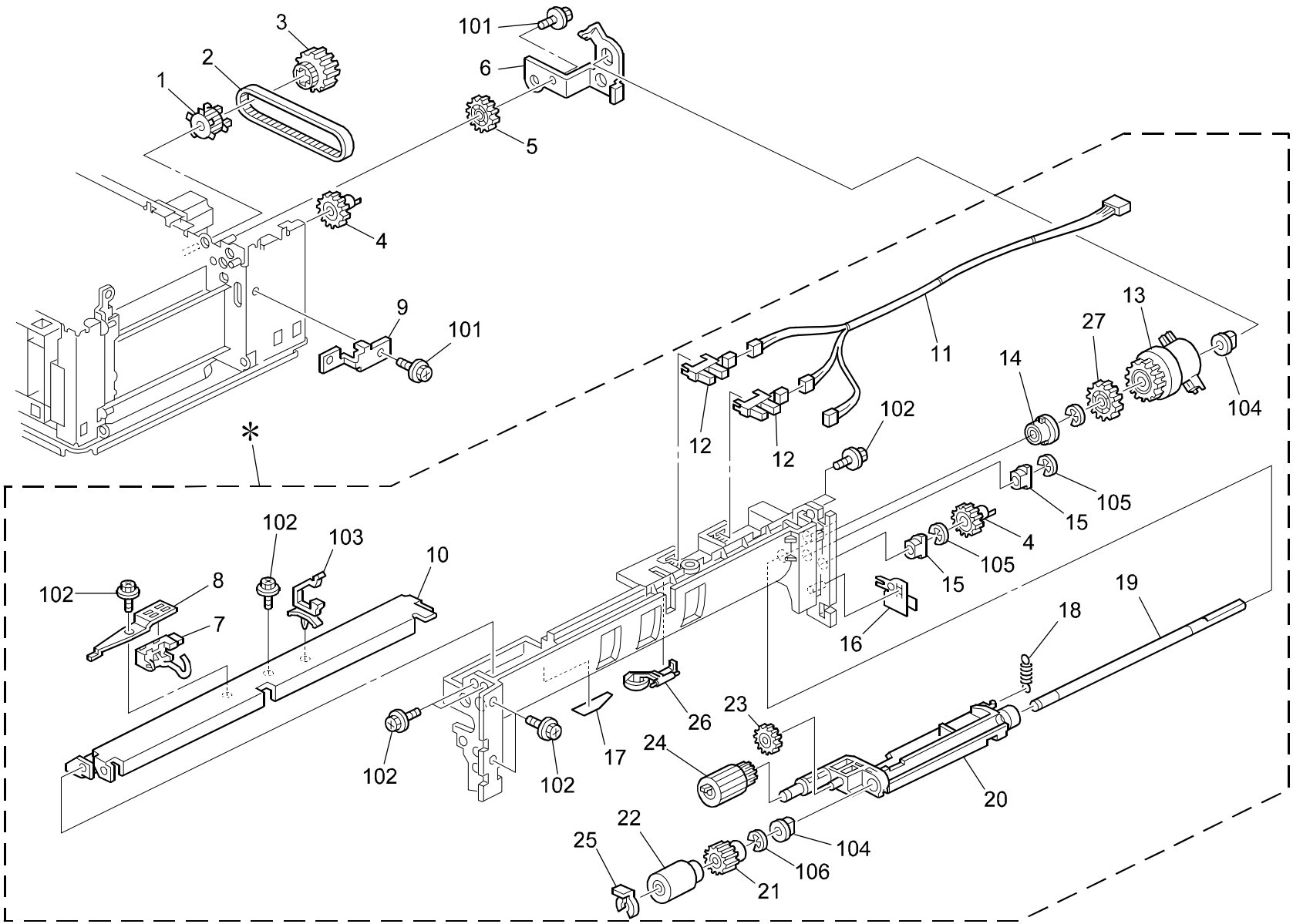

5.Paper Feed Section 1 (G569)

Index No.	Part No.	Description	Q'ty Per Assembly
*	G568 2650	Paper Feed Unit (17/26/27)	1
*	G569 2511	Paper Tray Ass'y (57)	1
*	G569 2510	Paper Tray Ass'y (67)	1
1	G568 2838	Timing Pulley - 20T	1
2	G569 2819	Timing Belt - S3M 222	1
3	G568 2836	Gear - Z28/20T	1
4	AB01 4038	Gear - 22Z	2
5	G569 2724	Gear - Z24	1
6	G569 2846	Upper Drum Stay - Feed Roller	1
7	AW02 0131	Photo-interruptor-vertical Transp.	1
8	A232 2781	Sensor Bracket	1
9	G567 6311	Bracket:Coupling:2	1
10	A232 2780	Stay - Paper Feed	1
11	G568 5370	Harness - Paper Feed Unit	1
12	AW02 0056	Photointerruptor - EE-SX4235A-P1	2
13	AX20 0221	Magnetic Clutch - Paper Feed	1
14	AA08 3014	One-way Clutch	1
15	AA08 2072	Bushing - M6	2
16	G313 2764	Rear Grounding Plate	1
17	A232 2766	Feed Mylar	1
18	AA06 0691	Tension Spring	1
19	AA14 0743	Shaft - Feed	1
20	A232 2763	Pick-up Arm	1
21	AB01 1218	Gear - Roller Clutch	1
22	AF03 1049	Feed Roller (17/26/27)	1
22	AF03 1085	Paper Feed Roller - Feed (57/66/67)	1
23	AB01 1188	Gear - 21Z	1
24	AF03 0049	Pick-up Roller (17/26/27)	1
24	AF03 0085	Paper Feed Roller - Pickup (57/66/67)	1
25	AA10 0014	Retaining Ring C - Separate	1
26	A232 2762	Paper End Feeler	1
27	G569 2822	Gear - Z30	1

Index No.	Part No.	Description	Q'ty Per Assembly
101	0451 3006B	Tapping Screw - M3x6	
102	0451 3008B	Tapping Screw - M3x8	
103	1105 0511	Harness Clamp - LWS-0306ZC	
104	0805 3480	Bushing - 6mm	
105	0720 0040E	Retaining Ring - M4	
106	0805 0089	Retaining Ring - M4	

6.Paper Feed Section 2 (G569)

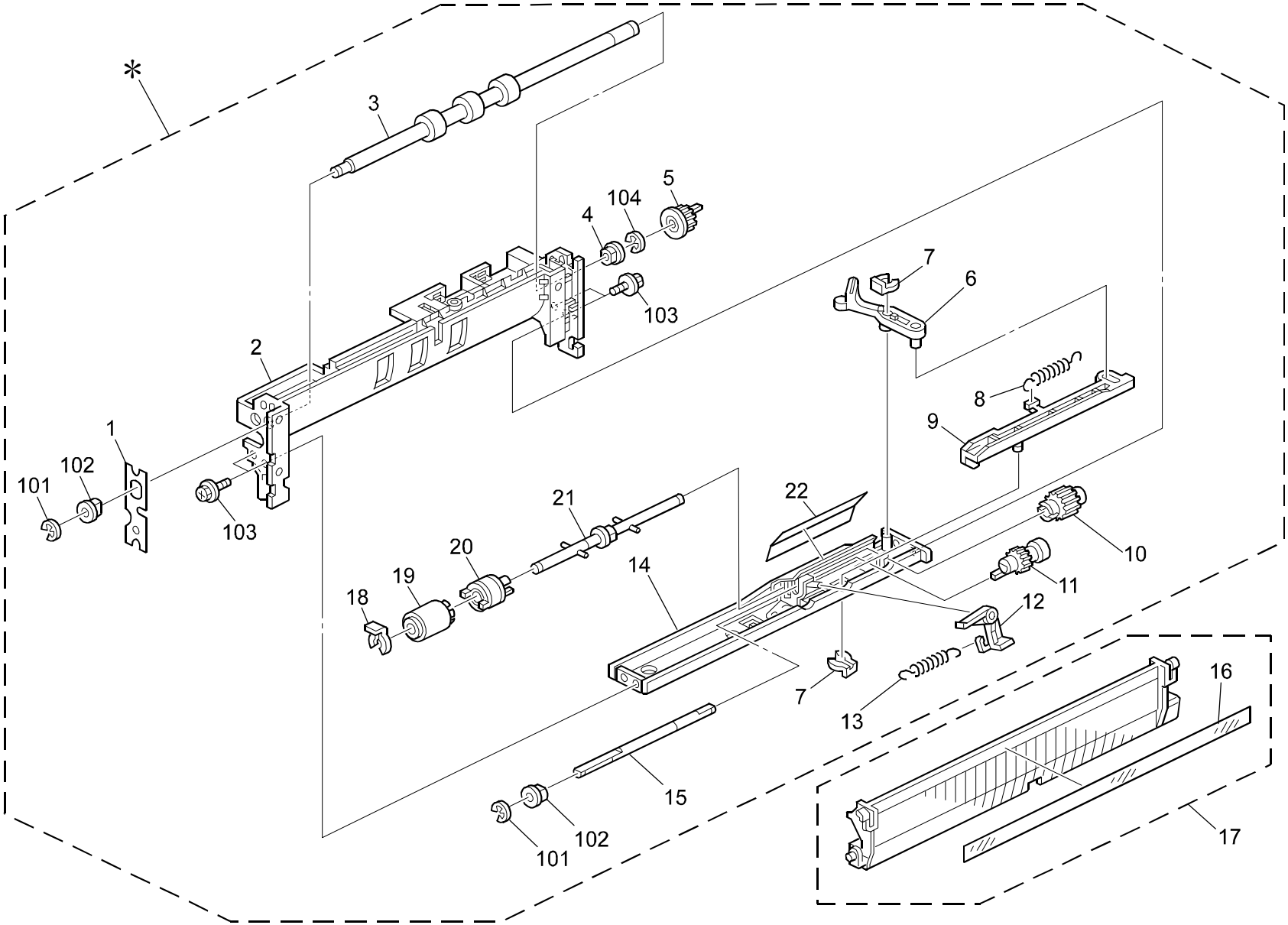

6.Paper Feed Section 2 (G569)

Index No.	Part No.	Description	Q'ty Per Assembly
*	G568 2665	Paper Feed Unit:Paper Bank:2:Ass'y	1
1	G313 2765	Front Grounding Plate	1
2	G568 2856	Housing - Paper Feed Unit	1
3	AF02 0404	Transport Roller	1
4	AA08 2070	Bushing - 8x16x7	1
5	AB03 0565	Timing Pulley - 20T	1
6	G065 2776	Release Lever	1
7	5206 2686	Snap Ring	2
8	AA06 0693	Tension Spring	1
9	G065 2775	Link Lever	1
10	AB01 0107	Gear - 23Z	1
11	AB01 0106	Gear - 24Z	1
12	G065 2774	Pressure Lever	1
13	AA06 0908	Release Spring	1
14	G060 2725	Stay - Paper Separation	1
15	AA14 0656	Shaft - Gear	1
16	A232 2787	Vertical Transport Guide	1
17	A232 2785	Vertical Guide	1
18	AA10 0014	Retaining Ring C - Separate	1
19	AF03 2049	Separation Roller (17/26/27)	1
19	AF03 2085	Paper Feed Roller - Separate (57/66/67)	1
20	G060 2900	Torque Limiter - 40mn·M MM18	1
21	G568 2689	Bank Separate Driven Shaft	1
22	B004 2782	Rear Feed Mylar	1

Index No.	Part No.	Description	Q'ty Per Assembly
101	0720 0040E	Retaining Ring - M4	
102	0805 3480	Bushing - 6mm	
103	0451 3008B	Tapping Screw - M3x8	
104	0720 0060E	Retaining Ring - M6	

7.Drive And Electrical (G569)

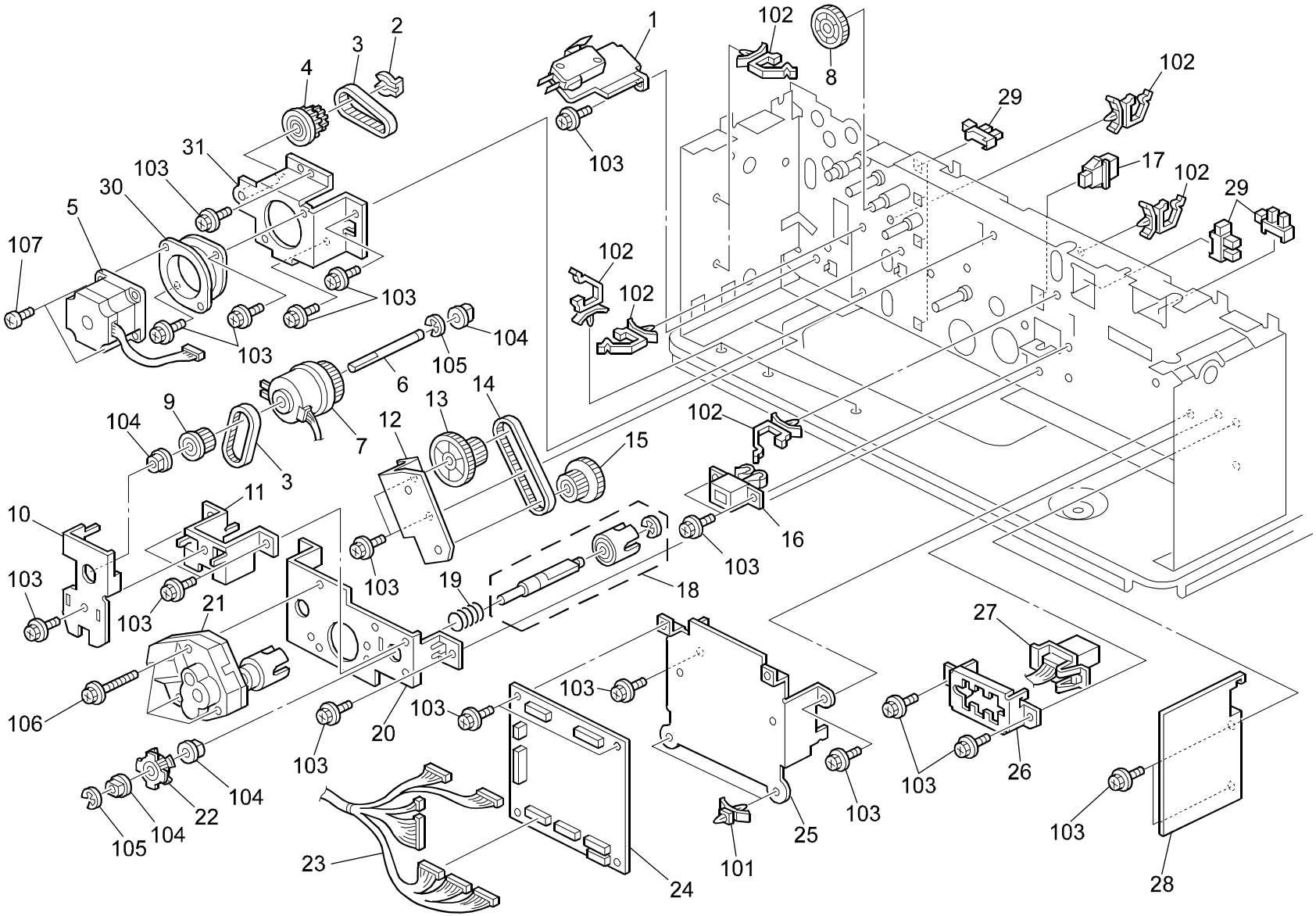

7.Drive And Electrical (G569)

Index No.	Part No.	Description	Q'ty Per Assembly
1	A232 2881	Micro Switch - On-Off Detector	1
2	5215 2621	Snap Ring - M6	1
3	G569 2850	Timing Belt - S3M150	2
4	G568 2835	Gear - Z19/29T	1
5	G568 2702	Stepper Motor - DC4.42W	1
6	G569 2835	Magnetic Clutch Shaft	1
7	AX20 0158	Magnetic Clutch - 0.8n 28z	1
8	G569 2829	Gear - 31Z	1
9	G569 2855	Timing Pulley - 17T	1
10	G569 2826	Bracket - Magnetic Clutch	1
11	G569 2825	Joint Bracket	1
12	G569 2827	Drum Stay - Timing Belt	1
13	G569 2852	Gear - Z34/T14	1
14	G569 2845	Timing Belt - S3M 186	1
15	G569 2853	Gear - 27Z/18T	1
16	G697 1082	Tray Holder	1
17	AW50 0023	Push Switch	1
18	G569 2816	Joint Shaft	1
19	G569 2901	Spring - Lift Motor	1
20	G569 2881	Bracket - DC Motor	1
21	G569 2900	DC Motor - 24W	1
22	G569 2836	Timing Pulley - 20T	1
23	G569 5300	Harness - Main	1
24	G569 5111	Interface Board (17/26/27)	1
24	G569 5115	PCB Ass'y (57/66/67)	1
25	G568 1187	Bracket - Interface Board	1
26	G569 1085	Drawer Bracket	1
27	G569 5310	Harness - Connecting	1
28	G569 1087	Bracket - Safety	1
29	AW02 0056	Photointerrupter - EE-SX4235A-P1	6
30	AA16 1131	Cushion - Stepper Motor	1
31	G568 2830	Bracket - Stepper Motor	1

Index No.	Part No.	Description	Q'ty Per Assembly
101	1105 0192	Locking Support	
102	1105 0489	Harness Clamp - LWS 1316	
103	0451 3006B	Tapping Screw - M3x6	
104	0805 3480	Bushing - 6mm	
105	0720 0040E	Retaining Ring - M4	
106	0451 3030B	Tapping Screw - 3x30	
107	0314 0080B	Philips Pan Head Screw - M4x8	

8.Interface Board (G569 17/26/27)

CAPACITOR

SYMBOL NO.	INDEX NO.
C100	138
C101	138
C102	138
C104	137
C105	143
C106	142
C107	142
C108	142
C109	142
C110	142

SYMBOL NO.	INDEX NO.
C111	142
C112	142
C113	142
C114	142
C115	142
C116	142
---	---
C118	141
C119	141
C120	141

SYMBOL NO.	INDEX NO.
C121	141
C122	141
C123	141
C124	141
C125	141
C126	141
C127	141
C128	141
C129	141
C130	141

SYMBOL NO.	INDEX NO.
C131	141
C132	141
C133	141
C134	141
C135	141
C136	141
C137	140
C138	139
C139	139
C140	141

SYMBOL NO.	INDEX NO.
C141	141
C142	141
C143	141

CONNECTOR

SYMBOL NO.	INDEX NO.
CN100	104
CN101	101
CN102	103
CN103	108
CN104	102
---	---
CN106	105
---	---
CN108	106
CN109	107

SYMBOL NO.	INDEX NO.
IC100	1
IC101	117
IC102	116
IC103	115
IC104	119
IC105	114
---	---
IC107	118

JP

SYMBOL NO.	INDEX NO.
JP100	132
---	---
JP102	133

PC

SYMBOL NO.	INDEX NO.
PC100	113

OSC

SYMBOL NO.	INDEX NO.
OSC100	120

Q

SYMBOL NO.	INDEX NO.
Q100	110

RESISTOR

SYMBOL NO.	INDEX NO.
R100	124
R101	126
R103	126
R104	126
R105	126
R106	126
R107	126
R108	126
R109	126
---	---

SYMBOL NO.	INDEX NO.
R111	126
R112	131
R113	130
R114	130
R115	130
R116	141
R117	129
R118	128
R119	127
R120	125

SYMBOL NO.	INDEX NO.
R121	136
R122	135
R123	109
R124	134
R125	129

RN

SYMBOL NO.	INDEX NO.
RN100	122

RN

SYMBOL NO.	INDEX NO.
RN101	122
RN102	122
RN103	122
RN104	122
RN105	122
RN106	122
RN107	122
RN108	122
RN109	121
RN110	121

SYMBOL NO.	INDEX NO.
RN111	121
RN112	121
RN113	121
RN114	123

ZD

SYMBOL NO.	INDEX NO.
ZD100	112
ZD101	111

8.Interface Board (G569 17/26/27)

Index No.	Part No.	Description	Q'ty Per Assembly
*	G569 5111	Interface Board	1
1	G568 5510	IC:I/O Control:FLB/ARB	1

Index No.	Part No.	Description	Q'ty Per Assembly
101	1102 6300	Connector - 7P	
102	1102 6302	Connector - 9P	
103	1102 6305	Connector - 12P	
104	1102 6307	Connector - 14P	
105	1102 6308	Connector - 15P	
106	1102 6316	Connector - 9P	
107	1102 6319	Connector - 12P	
108	1102 7244	Connector	
109	1109 0015	Circuit Protector - Smd050	
110	1400 0398	Transistor - 2SC2412K	
111	1402 1378	Diode - PTZ12A	
112	1402 1380	Diode - PTZ 6.2A	
113	1403 0520	Photocoupler - TLP521-1	
114	1407 1535	IC - TD62308AP	
115	1407 1596	TTLIC - SN74LS14NS	
116	1407 2187	TTLIC - SN74LS07NS	
117	1408 0611	IC - 3771	
118	1408 0827	IC - TA8429H	
119	1408 1394	IC - STK672-110	
120	1503 0865	Oscillator - 9.8304MHZ	
121	1601 7751	Resistor - 4.7KΩ ±5%	
122	1601 7752	Resistor Array - 10K Ω ±5%	
123	1601 7791	Resistor Array - 1K Ω ±5%	
124	1611 9222	Resistor - 2.2K Ω ±5% 1/2W	
125	1630 4100	Resistor - 10 Ω ±5% 1/16W	
126	1630 4103	Resistor - 10KΩ ±5% 1/16W	
127	1630 4161	Resistor - 160 Ω ±5% 1/16W	
128	1630 4201	Resistor - 200 Ω ±5% 1/16W	
129	1630 4222	Resistor - 2.2K Ω ±5%	
130	1630 4472	Resistor - 4.7KΩ ±5% 1/16W	
131	1630 4562	Resistor - 5.6k Ω - ±5% - 1/16W	
132	1633 0000	Resistor - 0 Ω 1/10W	
133	1634 0000	Resistor - 0 Ω 1/16W	
134	1634 5109	Resistor - 51.0 Ω ±1% 1/16W	
135	1634 5600	Resistor - 560Ω ±1% 1/16W	

Index No.	Part No.	Description	Q'ty Per Assembly
136	1634 8201	Resistor:8.2KΩ:±1%:1/16W:1608	
137	1640 5100	Capacitor - 10µF+20% 50	
138	1640 5470	Capacitor - 47µF±20% 50V	
139	1660 2220	Capacitor - 22pF ±20% 35V	
140	1660 2471	Capacitor - 470pF - ±5% - 50V	
141	1660 4102	Capacitor - 1000pF ±10% 50V	
142	1660 4103	Capacitor - 10000pF - ±10% - 50V	
143	1660 8104	Capacitor - 0.1µF+80-20% 25V	

Index No.	Part No.	Description	Q'ty Per Assembly

9.Interface Board (G569 57/66/67)

CAPACITOR

SYMBOL NO.	INDEX NO.
C100	125
C101	130
C102	124
C104	129
C105	145
C106	144
C107	144
C108	144
C109	144
C110	144

SYMBOL NO.	INDEX NO.
C111	144
C112	144
C113	144
C114	144
C115	144
C116	144
---	---
C118	143
C119	143
C120	143

SYMBOL NO.	INDEX NO.
C121	143
C122	143
C123	143
C124	143
C125	143
C126	143
C127	143
C128	143
C129	143
C130	143

SYMBOL NO.	INDEX NO.
C131	143
C132	143
C133	143
C134	143
C135	143
C136	143
C137	142
C138	141
C139	141
C140	143

SYMBOL NO.	INDEX NO.
C141	143
C142	143
C143	143

CONNECTOR

SYMBOL NO.	INDEX NO.
CN100	104
CN101	101
CN102	103
CN103	108
CN104	102
---	---
CN106	105
---	---
CN108	106
CN109	107

SYMBOL NO.	INDEX NO.
IC100	1
IC101	117
IC102	116
IC103	115
IC104	119
IC105	114
---	---
IC107	118

JP

SYMBOL NO.	INDEX NO.
JP100	127
---	---
JP102	128

PC

SYMBOL NO.	INDEX NO.
PC100	113

OSC

SYMBOL NO.	INDEX NO.
OSC100	120

Q

SYMBOL NO.	INDEX NO.
Q100	110

RESISTOR

SYMBOL NO.	INDEX NO.
R100	126
R101	132
R103	132
R104	132
R105	132
R106	132
R107	132
R108	132
R109	132
---	---

SYMBOL NO.	INDEX NO.
R111	132
R112	137
R113	136
R114	136
R115	136
R116	143
R117	135
R118	134
R119	133
R120	131

SYMBOL NO.	INDEX NO.
R121	140
R122	139
R123	109
R124	138
R125	135

RN

SYMBOL NO.	INDEX NO.
RN100	122

RN

SYMBOL NO.	INDEX NO.
RN101	122
RN102	122
RN103	122
RN104	122
RN105	122
RN106	122
RN107	122
RN108	122
RN109	121
RN110	121

SYMBOL NO.	INDEX NO.
RN111	121
RN112	121
RN113	121
RN114	123

ZD

SYMBOL NO.	INDEX NO.
ZD100	111
ZD101	112

9.Interface Board (G569 57/66/67)

Index No.	Part No.	Description	Q'ty Per Assembly
*	G569 5115	PCB Ass'y	1
1	G568 5540	IC:I/O Control:Florida-B:P3	1

Index No.	Part No.	Description	Q'ty Per Assembly
101	1102 6300	Connector - 7P	
102	1102 6302	Connector - 9P	
103	1102 6305	Connector - 12P	
104	1102 6307	Connector - 14P	
105	1102 6308	Connector - 15P	
106	1102 6316	Connector - 9P	
107	1102 6319	Connector - 12P	
108	1102 7244	Connector	
109	1109 0015	Circuit Protector - Smd050	
110	1400 0398	Transistor - 2SC2412K	
111	1402 1662	Diode:Ptz6.2b	
112	1402 1663	Diode - ZTP12B	
113	1403 0520	Photocoupler - TLP521-1	
114	1407 1535	IC - TD62308AP	
115	1407 1596	TTLIC - SN74LS14NS	
116	1407 2187	TTLIC - SN74LS07NS	
117	1408 0611	IC - 3771	
118	1408 0827	IC - TA8429H	
119	1408 1394	IC - STK672-110	
120	1503 0865	Oscillator - 9.8304MHZ	
121	1601 7751	Resistor - 4.7KΩ ±5%	
122	1601 7752	Resistor Array - 10K Ω ±5%	
123	1601 7791	Resistor Array - 1K Ω ±5%	
124	1604 2522	Capacitor - 220µF±20%	
125	1604 4659	Capacitor - 120µF±20% 50V	
126	1611 9222	Resistor - 2.2K Ω ±5% 1/2W	
127	1633 0000	Resistor - 0 Ω 1/10W	
128	1634 0000	Resistor - 0 Ω 1/16W	
129	1640 5100	Capacitor - 10µF+20% 50	
130	1640 5470	Capacitor - 47µF±20% 50V	
131	1650 4100	Resistor - 10Ω ±5% 1/10W	
132	1650 4103	Resistor - 10KΩ ±5% 1/10W	
133	1650 4161	Resistor - 160Ω ±5% 1/10W	
134	1650 4201	Resistor - 200Ω±5%1/10W	
135	1650 4222	Resistor - 2.2KΩ±5%1/10W	

Index No.	Part No.	Description	Q'ty Per Assembly
136	1650 4472	Resistor - 4.7KΩ ±5% 1/10W	
137	1650 4562	Resistor - 5.6KΩ ±5% 1/10W	
138	1654 5109	Resistor:51Ω:±1%:1/10w	
139	1654 5600	Resistor - 560Ω±1% 1/10W	
140	1654 8201	Resistor - 8.2KΩ ±1% 1/10W	
141	1660 2220	Capacitor - 22pF ±20% 35V	
142	1660 2471	Capacitor - 470pF - ±5% - 50V	
143	1660 4102	Capacitor - 1000pF ±10% 50V	
144	1660 4103	Capacitor - 10000pF - ±10% - 50V	
145	1660 8104	Capacitor - 0.1μF+80-20% 25V	

Index No.	Part No.	Description	Q'ty Per Assembly

10.Decals And Documents (G569)

1

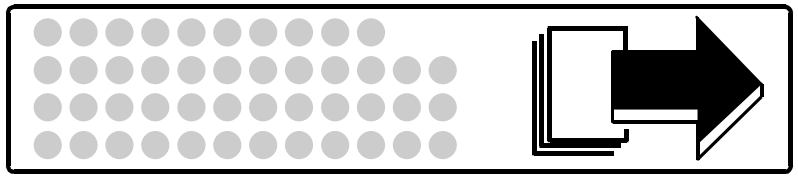

2

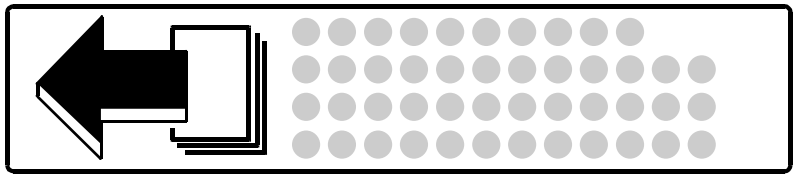

3

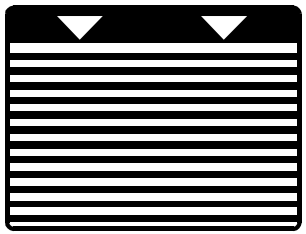

4

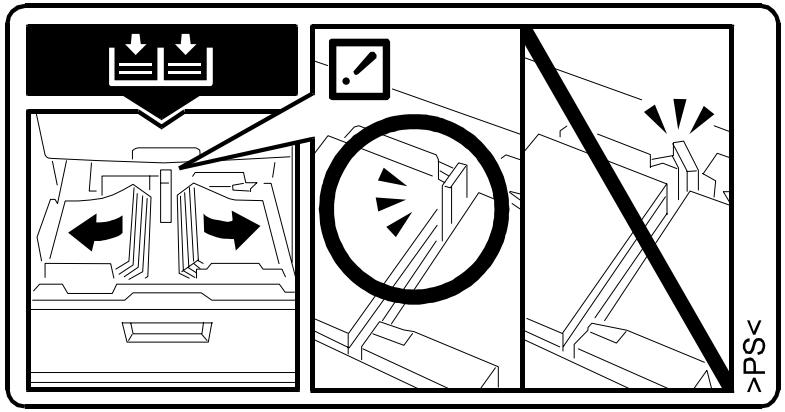

5

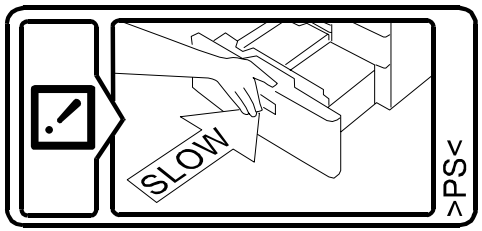

10.Decals And Documents (G569)

Index No.	Part No.	Description	Q'ty Per Assembly
1	A096 6677	Decal - Right Paper Set	1
2	A096 6678	Decal - Left Paper Set	1
3	AA00 2010	Decal - Paper Level	1
4	G569 2695	Decal - Paper Set Direction	1
5	G569 2697	Decal - Paper Tray - Set	1
6	GA00 3040	Decal - Front	1

Index No.	Part No.	Description	Q'ty Per Assembly

Parts Index

Parts Index

Part No.	Description	Page and Index No.
G569 1078	Drawer Bracket	3 - 8
G569 1080	Lower Guide Rail	5 - 13
G569 1085	Drawer Bracket	15 - 26
G569 1087	Bracket - Safety	15 - 28
G569 1175	Right Slide Rail	5 - 8
G569 1251	Left Cover - Large Capacity Tray	3 - 3
G569 2510	Paper Tray Ass'y (67)	11 - *
G569 2511	Paper Tray Ass'y (57)	11 - *
G569 2515	Guide Plate - Vertical Transport	3 - 4
G569 2565	Guide Plate - Vertical Transport	3 - 12
G569 2570	Grounding Plate - Vertical Transport Shaft	3 - 31
G569 2601	Tandem LCT Ass'y	5 - *
G569 2602	Large Capacity Tray (17/26/27/66/67)	7 - *
G569 2606	Large Capacity Tray:Arabia:Exp:Ass'y (57)	7 - *
G569 2640	Front Side Fence	5 - 17
G569 2650	Rear Side Fence	5 - 16
G569 2660	Timing Belt - S3M378	7 - 3
G569 2662	Front Stay - Timing Belt	7 - 14
G569 2663	Rear Stay - Timing Belt	7 - 8
G569 2667	Bracket	7 - 1
G569 2669	Bracket - Roller	7 - 12
G569 2670	Slider - End Fence	9 - 1
G569 2672	Stopper - Timing Belt	9 - 11
G569 2674	Timing Belt - S3M588	9 - 10
G569 2680	Cover - Timing Belt	5 - 3
G569 2682	Grounding Plate - Sensor	9 - 7
G569 2683	Grounding Plate - Timing Belt Cover	9 - 8
G569 2684	Spring Plate - Tandem LCT	7 - 13
G569 2686	End Fence - Tandem Tray	5 - 5
G569 2688	Front Side Fence - Tandem Tray	5 - 1
G569 2690	Front Cover	3 - 2
G569 2695	Decal - Paper Set Direction	21 - 4
G569 2695	Decal - Paper Set Direction	3 - 1
G569 2697	Decal - Paper Tray - Set	21 - 5
G569 2697	Decal - Paper Tray - Set	3 - 27

Part No.	Description	Page and Index No.
G569 2705	Side Fence Ass'y - Tandem Tray	5 - 18
G569 2706	Shoe:Side Fence	5 - 12
G569 2707	End Fence - Tandem Tray	5 - 14
G569 2709	Bracket - Paper Height Sensor - Tandem LCT	5 - 10
G569 2710	Timing Pulley - Tray Bottom Plate	7 - 7
G569 2712	Tension Spring	5 - 11
G569 2715	Cover - Positioning Sensor	5 - 6
G569 2724	Gear - Z24	11 - 5
G569 2761	Rivet - 31j5	5 - 2
G569 2816	Joint Shaft	15 - 18
G569 2819	Timing Belt - S3M 222	11 - 2
G569 2822	Gear - Z30	11 - 27
G569 2825	Joint Bracket	15 - 11
G569 2826	Bracket - Magnetic Clutch	15 - 10
G569 2827	Drum Stay - Timing Belt	15 - 12
G569 2829	Gear - 31Z	15 - 8
G569 2835	Magnetic Clutch Shaft	15 - 6
G569 2836	Timing Pulley - 20T	15 - 22
G569 2845	Timing Belt - S3M 186	15 - 14
G569 2846	Upper Drum Stay - Feed Roller	11 - 6
G569 2850	Timing Belt - S3M150	15 - 3
G569 2852	Gear - Z34/T14	15 - 13
G569 2853	Gear - 27Z/18T	15 - 15
G569 2855	Timing Pulley - 17T	15 - 9
G569 2881	Bracket - DC Motor	15 - 20
G569 2883	Shaft - Slider	9 - 9
G569 2900	DC Motor - 24W	15 - 21
G569 2901	Spring - Lift Motor	15 - 19
G569 5111	Interface Board	17 - *
G569 5111	Interface Board (17/26/27)	15 - 24
G569 5115	PCB Ass'y	19 - *
G569 5115	PCB Ass'y (57/66/67)	15 - 24
G569 5300	Harness - Main	15 - 23
G569 5310	Harness - Connecting	15 - 27
G569 5350	Harness - Tandem Tray	9 - 6

Part No.	Description	Page and Index No.
G569 5510	Photointerruptor - Paper Volume	9 - 5
G569 5510	Photointerruptor - Paper Volume	5 - 9
G569 6160	Front Stand (17/26/27)	3 - 6
G569 6161	Rear Stand (17/26/27)	3 - 10
G569 6168	Rear Left Stand Bracket	3 - 28
G569 6169	Rear Right Stand Bracket	3 - 29
G569 6200	Side Stand (57/66/67)	3 - 33
G569 6206	Screw - Stand Short	3 - 35
G569 6207	Screw - Stand Long	3 - 34

Part No.	Description	Page and Index No.
A096 6677	Decal - Right Paper Set	7 - 10
A096 6677	Decal - Right Paper Set	21 - 1
A096 6678	Decal - Left Paper Set	5 - 4
A096 6678	Decal - Left Paper Set	21 - 2
A230 2525	Stopper - Heater	5 - 21
A232 2762	Paper End Feeler	11 - 26
A232 2763	Pick-up Arm	11 - 20
A232 2766	Feed Mylar	11 - 17
A232 2780	Stay - Paper Feed	11 - 10
A232 2781	Sensor Bracket	11 - 8
A232 2785	Vertical Guide	13 - 17
A232 2787	Vertical Transport Guide	13 - 16
A232 2862	Driven Roller	3 - 17
A232 2881	Micro Switch - On-Off Detector	15 - 1
A421 2543	Friction Pad	7 - 11
A507 1096	Philips Screw - M5x6	3 - 24
A548 6121	Screw - M4	3 - 30
A682 1067	Upper Middle Stay	3 - 5
A682 2552	Front Hook - Vertical Transport	3 - 23
A682 2553	Rear Hook - Vertical Transport Cover	3 - 14
A682 2559	Lever Stopper	3 - 18
A682 2565	Stopper - Vertical Transport Cover	3 - 22
A862 2641	Shaft - Tray Bottom Plate Ass'y	7 - 9
A862 2692	Oil Damper	7 - 2
A862 2728	Timing Pulley Bracket	9 - 14
A862 2745	Timing Belt Bracket	9 - 2
B004 2782	Rear Feed Mylar	13 - 22
G060 2725	Stay - Paper Separation	13 - 14
G060 2900	Torque Limiter - 40mn･M MM18	13 - 20
G065 2774	Pressure Lever	13 - 12
G065 2775	Link Lever	13 - 9
G065 2776	Release Lever	13 - 6
G313 2764	Rear Grounding Plate	11 - 16
G313 2765	Front Grounding Plate	13 - 1
G567 6310	Bracket:Coupling:Paper Bank	3 - 11

Part No.	Description	Page and Index No.
G567 6311	Bracket:Coupling:2	11 - 9
G568 1187	Bracket - Interface Board	15 - 25
G568 1250	Right Cover	3 - 13
G568 1251	Rear Cover	3 - 9
G568 2551	Lever - Vertical Transport	3 - 20
G568 2650	Paper Feed Unit (17/26/27)	11 - *
G568 2665	Paper Feed Unit:Paper Bank:2:Ass'y	13 - *
G568 2689	Bank Separate Driven Shaft	13 - 21
G568 2702	Stepper Motor - DC4.42W	15 - 5
G568 2830	Bracket - Stepper Motor	15 - 31
G568 2835	Gear - Z19/29T	15 - 4
G568 2836	Gear - Z28/20T	11 - 3
G568 2838	Timing Pulley - 20T	11 - 1
G568 2856	Housing - Paper Feed Unit	13 - 2
G568 5320	Harness - Interface	3 - 7
G568 5340	Heater Harness	5 - 22
G568 5370	Harness - Paper Feed Unit	11 - 11
G568 5510	IC:I/O Control:FLB/ARB	17 - 1
G568 5540	IC:I/O Control:Florida-B:P3	19 - 1
G568 6220	Fixing Screw	3 - 32
G568 6560	Heater Sink Plate	5 - 20
G697 1082	Tray Holder	15 - 16

Part No.	Description	Page and Index No.
AA00 2010	Decal - Paper Level	5 - 7
AA00 2010	Decal - Paper Level	21 - 3
AA06 0691	Tension Spring	11 - 18
AA06 0693	Tension Spring	13 - 8
AA06 0715	Pressure Spring	3 - 19
AA06 0908	Release Spring	13 - 13
AA06 3573	Compression Spring	3 - 15
AA08 0254	Bushing - M4	3 - 16
AA08 2070	Bushing - 8x16x7	13 - 4
AA08 2070	Bushing - 8x16x7	7 - 6
AA08 2070	Bushing - 8x16x7	9 - 13
AA08 2072	Bushing - M6	11 - 15
AA08 3014	One-way Clutch	11 - 14
AA10 0014	Retaining Ring C - Separate	13 - 18
AA10 0014	Retaining Ring C - Separate	11 - 25
AA14 0656	Shaft - Gear	13 - 15
AA14 0670	Un Lock Shaft	3 - 21
AA14 0743	Shaft - Feed	11 - 19
AA14 3508	Flat Knob Screw - M4x10	5 - 15
AA16 1131	Cushion - Stepper Motor	15 - 30
AB01 0106	Gear - 24Z	13 - 11
AB01 0107	Gear - 23Z	13 - 10
AB01 1188	Gear - 21Z	11 - 23
AB01 1218	Gear - Roller Clutch	11 - 21
AB01 4038	Gear - 22Z	11 - 4
AB01 4135	Gear - 18Z	7 - 4
AB03 0565	Timing Pulley - 20T	13 - 5
AB03 0633	Timing Pulley - Tray Bottom Plate	7 - 5
AB03 3084	Timing Pulley - 15t - Drive	9 - 12
AB03 3085	Timing Pulley - 15T Driven	9 - 3
AF02 0404	Transport Roller	13 - 3
AF03 0049	Pick-up Roller (17/26/27)	11 - 24
AF03 0085	Paper Feed Roller - Pickup (57/66/67)	11 - 24
AF03 1049	Feed Roller (17/26/27)	11 - 22
AF03 1085	Paper Feed Roller - Feed (57/66/67)	11 - 22

Part No.	Description	Page and Index No.
AF03 2049	Separation Roller (17/26/27)	13 - 19
AF03 2085	Paper Feed Roller - Separate (57/66/67)	13 - 19
AH01 2013	Stopper Caster - 60kgf	3 - 25
AH01 2014	Caster - 60kgf	3 - 26
AW02 0056	Photointerruptor - EE-SX4235A-P1	11 - 12
AW02 0056	Photointerruptor - EE-SX4235A-P1	9 - 4
AW02 0056	Photointerrupter - EE-SX4235A-P1	15 - 29
AW02 0131	Photo-interruptor-vertical Transp.	11 - 7
AW50 0023	Push Switch	15 - 17
AX20 0158	Magnetic Clutch - 0.8n 28z	15 - 7
AX20 0221	Magnetic Clutch - Paper Feed	11 - 13
AX40 0109	Heater - 120V 9W	5 - 23
AX40 0110	Heater - 230V 9W	5 - 23
GA00 3040	Decal - Front	21 - 6
GA00 3056	Decal - Heater Warning	5 - 19

Part No.	Description	Page and Index No.
0314 0080B	Philips Pan Head Screw - M4x8	15 -107
0353 0060B	Philips Pan Head Screw - M3x6	3 - 105
0354 0080B	Screw - M4X8	5 - 105
0450 3008B	Tapping Screw - M3x8	7 - 102
0450 3008B	Tapping Screw - M3x8	5 - 101
0450 3008B	Tapping Screw - M3x8	9 - 101
0450 3008B	Tapping Screw - M3x8	3 - 101
0450 4010B	Tapping Screw - 4x10	3 - 104
0451 3006B	Tapping Screw - M3x6	11 -101
0451 3006B	Tapping Screw - M3x6	3 - 103
0451 3006B	Tapping Screw - M3x6	7 - 106
0451 3006B	Tapping Screw - M3x6	5 - 104
0451 3006B	Tapping Screw - M3x6	15 -103
0451 3008B	Tapping Screw - M3x8	11 -102
0451 3008B	Tapping Screw - M3x8	13 -103
0451 3008B	Tapping Screw - M3x8	7 - 101
0451 3008H	Tapping Screw - M3x8	3 - 102
0451 3030B	Tapping Screw - 3x30	15 -106
0451 4006B	Tapping Screw - 4x6	7 - 103
0452 3008B	Tapping Screw - M3x8	7 - 105
0452 4008B	Binding Self Tapping Screw - M4x8	5 - 103
0623 0140E	Spring Pin - 3x14mm	7 - 107
0720 0040E	Retaining Ring - M4	13 -101
0720 0040E	Retaining Ring - M4	11 -105
0720 0040E	Retaining Ring - M4	9 - 102
0720 0040E	Retaining Ring - M4	15 -105
0720 0060E	Retaining Ring - M6	13 -104
0720 0060E	Retaining Ring - M6	9 - 103
0720 0060E	Retaining Ring - M6	7 - 104
0805 0088	Retaining Ring - M6	3 - 106
0805 0089	Retaining Ring - M4	11 -106
0805 3480	Bushing - 6mm	13 -102
0805 3480	Bushing - 6mm	9 - 104
0805 3480	Bushing - 6mm	11 -104
0805 3480	Bushing - 6mm	15 -104

Part No.	Description	Page and Index No.
0954 4008Z	Double Sens Screw - M4X8	5 - 106
1102 6300	Connector - 7P	19 -101
1102 6300	Connector - 7P	17 -101
1102 6302	Connector - 9P	19 -102
1102 6302	Connector - 9P	17 -102
1102 6305	Connector - 12P	17 -103
1102 6305	Connector - 12P	19 -103
1102 6307	Connector - 14P	17 -104
1102 6307	Connector - 14P	19 -104
1102 6308	Connector - 15P	19 -105
1102 6308	Connector - 15P	17 -105
1102 6316	Connector - 9P	19 -106
1102 6316	Connector - 9P	17 -106
1102 6319	Connector - 12P	17 -107
1102 6319	Connector - 12P	19 -107
1102 7244	Connector	19 -108
1102 7244	Connector	17 -108
1105 0192	Locking Support	15 -101
1105 0487	Harness Clamp	5 - 107
1105 0489	Harness Clamp - LWS 1316	15 -102
1105 0511	Harness Clamp - LWS-0306ZC	5 - 102
1105 0511	Harness Clamp - LWS-0306ZC	11 -103
1109 0015	Circuit Protector - Smd050	17 -109
1109 0015	Circuit Protector - Smd050	19 -109
1400 0398	Transistor - 2SC2412K	19 -110
1400 0398	Transistor - 2SC2412K	17 -110
1402 1378	Diode - PTZ12A	17 -111
1402 1380	Diode - PTZ 6.2A	17 -112
1402 1662	Diode:Ptz6.2b	19 -111
1402 1663	Diode - ZTP12B	19 -112
1403 0520	Photocoupler - TLP521-1	19 -113
1403 0520	Photocoupler - TLP521-1	17 -113
1407 1535	IC - TD62308AP	19 -114
1407 1535	IC - TD62308AP	17 -114
1407 1596	TTLIC - SN74LS14NS	17 -115

Part No.	Description	Page and Index No.
1407 1596	TTLIC - SN74LS14NS	19 -115
1407 2187	TTLIC - SN74LS07NS	17 -116
1407 2187	TTLIC - SN74LS07NS	19 -116
1408 0611	IC - 3771	17 -117
1408 0611	IC - 3771	19 -117
1408 0827	IC - TA8429H	17 -118
1408 0827	IC - TA8429H	19 -118
1408 1394	IC - STK672-110	17 -119
1408 1394	IC - STK672-110	19 -119
1503 0865	Oscillator - 9.8304MHZ	19 -120
1503 0865	Oscillator - 9.8304MHZ	17 -120
1601 7751	Resistor - 4.7KΩ ±5%	17 -121
1601 7751	Resistor - 4.7KΩ ±5%	19 -121
1601 7752	Resistor Array - 10K Ω ±5%	19 -122
1601 7752	Resistor Array - 10K Ω ±5%	17 -122
1601 7791	Resistor Array - 1K Ω ±5%	17 -123
1601 7791	Resistor Array - 1K Ω ±5%	19 -123
1604 2522	Capacitor - 220µF ±20%	19 -124
1604 4659	Capacitor - 120µF ±20% 50V	19 -125
1611 9222	Resistor - 2.2K Ω ±5% 1/2W	19 -126
1611 9222	Resistor - 2.2K Ω ±5% 1/2W	17 -124
1630 4100	Resistor - 10 Ω ±5% 1/16W	17 -125
1630 4103	Resistor - 10KΩ ±5% 1/16W	17 -126
1630 4161	Resistor - 160 Ω ±5% 1/16W	17 -127
1630 4201	Resistor - 200 Ω ±5% 1/16W	17 -128
1630 4222	Resistor - 2.2K Ω ±5%	17 -129
1630 4472	Resistor - 4.7KΩ ±5% 1/16W	17 -130
1630 4562	Resistor - 5.6k Ω - ±5% - 1/16W	17 -131
1633 0000	Resistor - 0 Ω 1/10W	19 -127
1633 0000	Resistor - 0 Ω 1/10W	17 -132
1634 0000	Resistor - 0 Ω 1/16W	19 -128
1634 0000	Resistor - 0 Ω 1/16W	17 -133
1634 5109	Resistor - 51.0 Ω ±1% 1/16W	17 -134
1634 5600	Resistor - 560Ω ±1% 1/16W	17 -135
1634 8201	Resistor:8.2KΩ:±1%:1/16W:1608	17 -136

Part No.	Description	Page and Index No.
1640 5100	Capacitor - 10µF +20% 50	19 -129
1640 5100	Capacitor - 10µF +20% 50	17 -137
1640 5470	Capacitor - 47µF ±20% 50V	17 -138
1640 5470	Capacitor - 47µF ±20% 50V	19 -130
1650 4100	Resistor - 10Ω ±5% 1/10W	19 -131
1650 4103	Resistor - 10KΩ ±5% 1/10W	19 -132
1650 4161	Resistor - 160Ω ±5% 1/10W	19 -133
1650 4201	Resistor - 200Ω±5%1/10W	19 -134
1650 4222	Resistor - 2.2KΩ±5%1/10W	19 -135
1650 4472	Resistor - 4.7KΩ ±5% 1/10W	19 -136
1650 4562	Resistor - 5.6KΩ ±5% 1/10W	19 -137
1654 5109	Resistor:51Ω:±1%:1/10w	19 -138
1654 5600	Resistor - 560Ω±1% 1/10W	19 -139
1654 8201	Resistor - 8.2KΩ ±1% 1/10W	19 -140
1660 2220	Capacitor - 22pF ±20% 35V	19 -141
1660 2220	Capacitor - 22pF ±20% 35V	17 -139
1660 2471	Capacitor - 470pF - ±5% - 50V	17 -140
1660 2471	Capacitor - 470pF - ±5% - 50V	19 -142
1660 4102	Capacitor - 1000pF ±10% 50V	17 -141
1660 4102	Capacitor - 1000pF ±10% 50V	19 -143
1660 4103	Capacitor - 10000pF - ±10% - 50V	19 -144
1660 4103	Capacitor - 10000pF - ±10% - 50V	17 -142
1660 8104	Capacitor - 0.1µF +80-20% 25V	19 -145
1660 8104	Capacitor - 0.1µF +80-20% 25V	17 -143

Part No.	Description	Page and Index No.
5206 2686	Snap Ring	13 - 7
5215 2621	Snap Ring - M6	15 - 2